Binura Silva, Lauren Wensley, Blake Farnham

Project Advisor – Dr. Adrian Ieta

High-Voltage Power Supply for Ionic Wind-Driven Systems

Content

Introduction

- The goal of this project is to design a more efficient power supply to be used to assist in ionic wind-driven systems and research lead by Dr. Adrian Ieta.
- The desired design will simulate a similar functionality of the currently used Glassman High Voltage FR Series 300 Watt Power Supply.
- The purpose is to complement ionic wind research by providing better mobility using lightweight and affordable parts.

Ionic Wind Research

- Ionic wind is airflow generated by electrostatic forces of corona discharge from conductors. It is an intense electric field of electrodes.
- It is not visible, but with the application of high voltage, ions are extracted near the sharp edges of the electrodes. The acceleration of these ions generate ionic wind and current.
- With a higher wind intensity, enough thrust is generated to actuate devices.
- In 2018, the first flight of an ionic rotational device and the first ionic wind-activated toy car were achieved at SUNY Oswego.
- Research continues using specifically the propeller-cylinder system, as shown on the right.

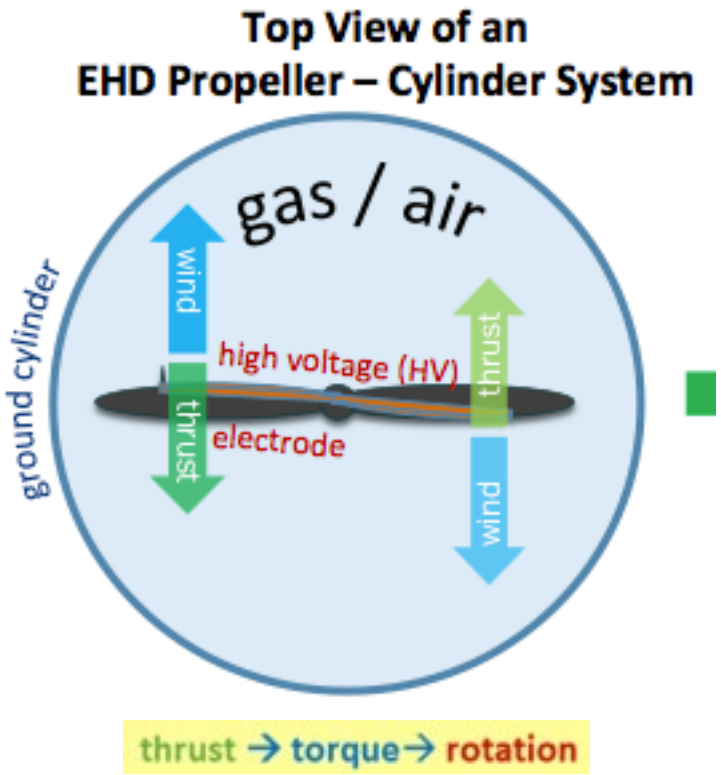

Ionic Wind Research

- Copper tape and metal pins were used on the propellers to create the electrode design.
- Various setups using these materials have been tested to determine which is the most efficient.
- Thrust measurements also help to determine the effects of these materials.
- Subsequently, the current and voltage readings using the Glassman high-voltage power supply assisted in establishing the ranges.
- A smaller, lightweight, and affordable high-voltage power supply would grant better mobility for future research using various ionic actuators.

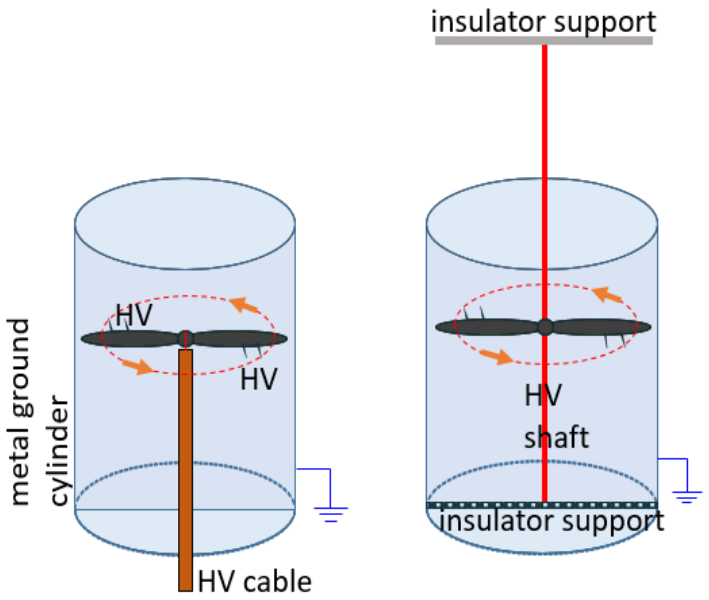

Thrust Measurement Setup

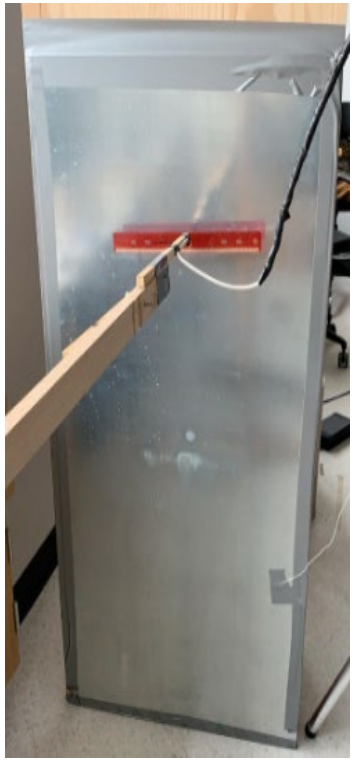

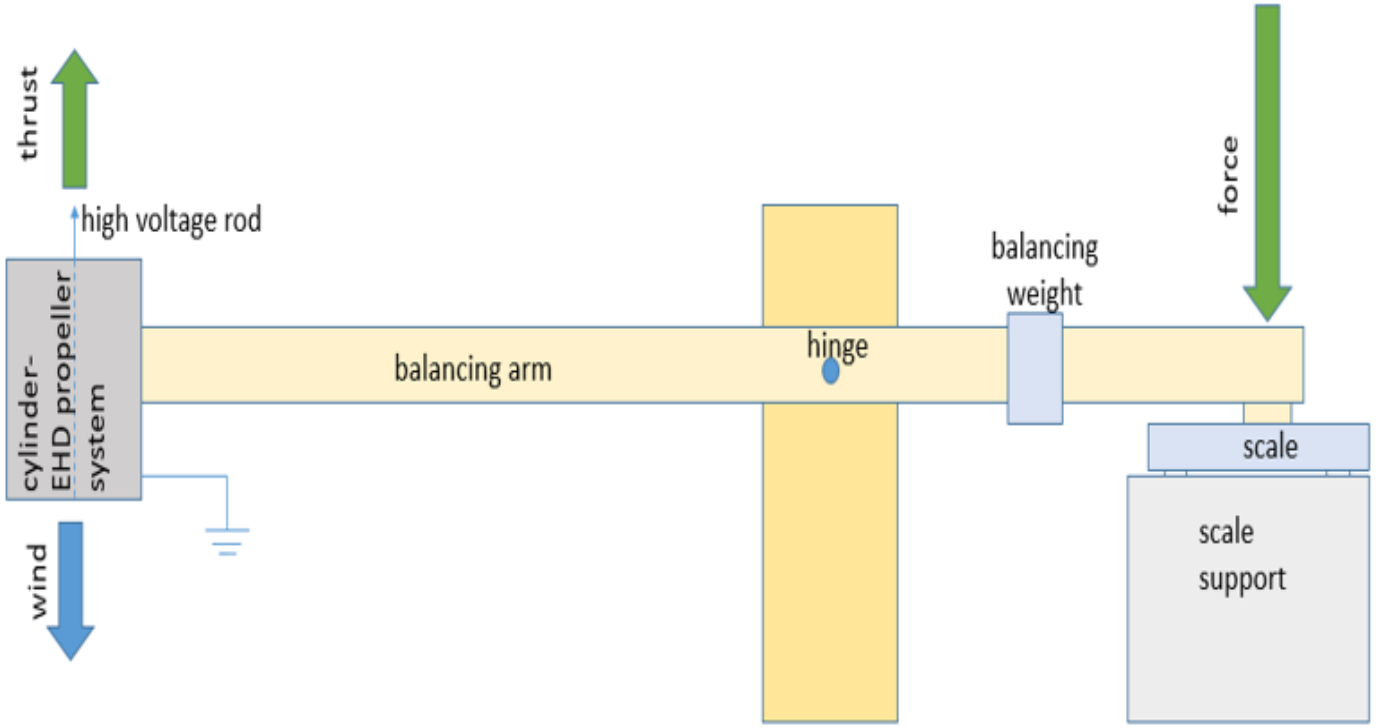

Lift of Two-Bladed Propeller

Video

The High Voltage Power Supply

- The primary function of a power supply is to convert electric current from a source to the correct voltage, current, and frequency to power the load.
- The proposed HVPS needs to simulate the working of a Glassman high-voltage power supply.
- Required output needs to be over 30kV.
- Output current needs be around 200mA or less.
- The needs of the EHD project are based on a lightweight HVPS design.
- HVPS needs to be modified, and it should have the potential to integrate with the actuator.

The High Voltage Power Supply

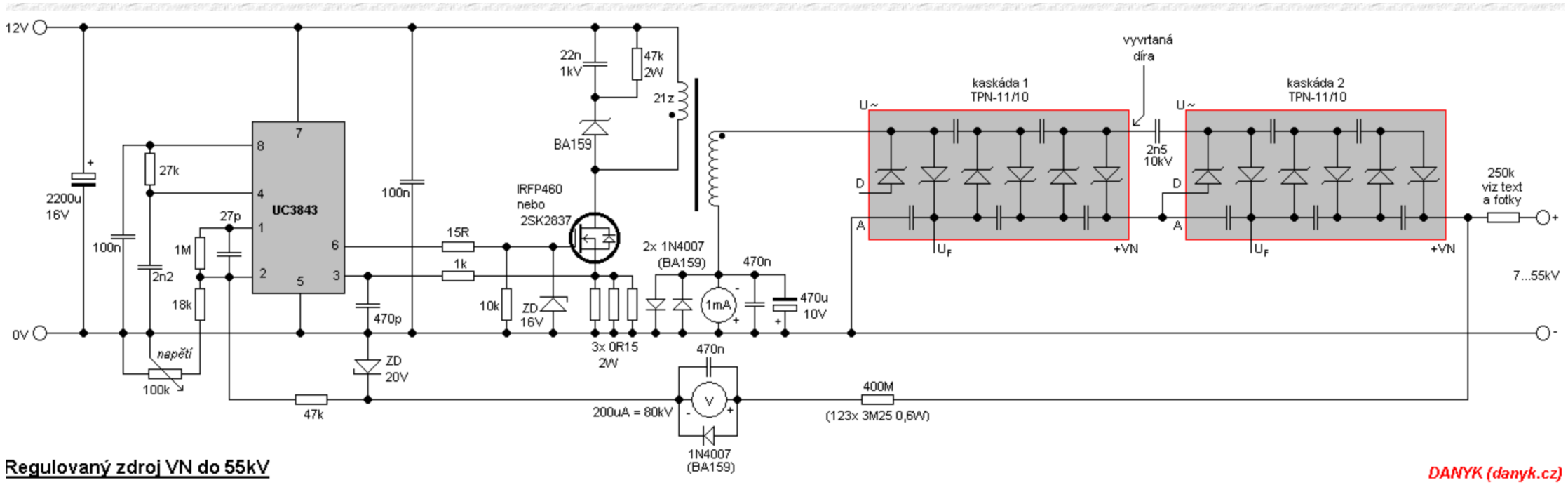

Regulovaný zdroj VN do 55kV

DANYK (danyk.cz)

Transformer

- The primary function of a power supply is to convert electric current from a source to the correct voltage, current, and frequency to power the load.
- Input voltage: 3.7V-4.2V,
- Current: <= 2A
- Output voltage: < 15KV
- Output current: < 0.4A
- High pressure two-stage ignition distance: <= 0.5 cm
- Size is about: 27 x 16 x 21mm
- The transformer has two primary windings. One of the main group is coarse copper wire, & the other a group of fine copper wire for the feedback winding. The secondary output is high voltage.

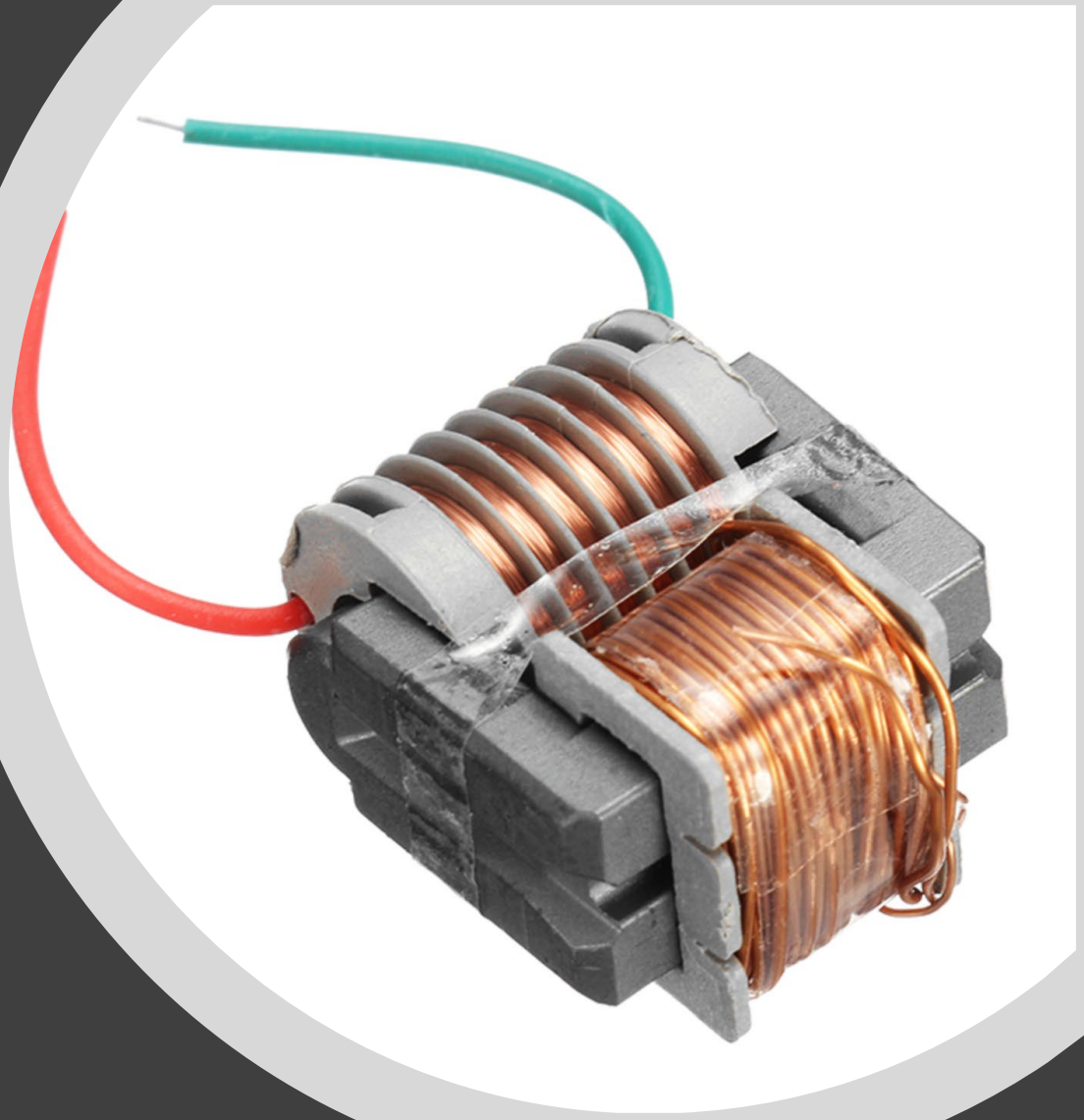

Transformer

- The transformer has two primary windings. One of the main group is coarse copper wire, & the other a group of fine copper wire for the feedback winding. The secondary output is high voltage.
- Transformers in a coarse and a thin winding together two copper wires are positive. Respectively, the main winding tail and feedback winding head connect to the power supply positive.

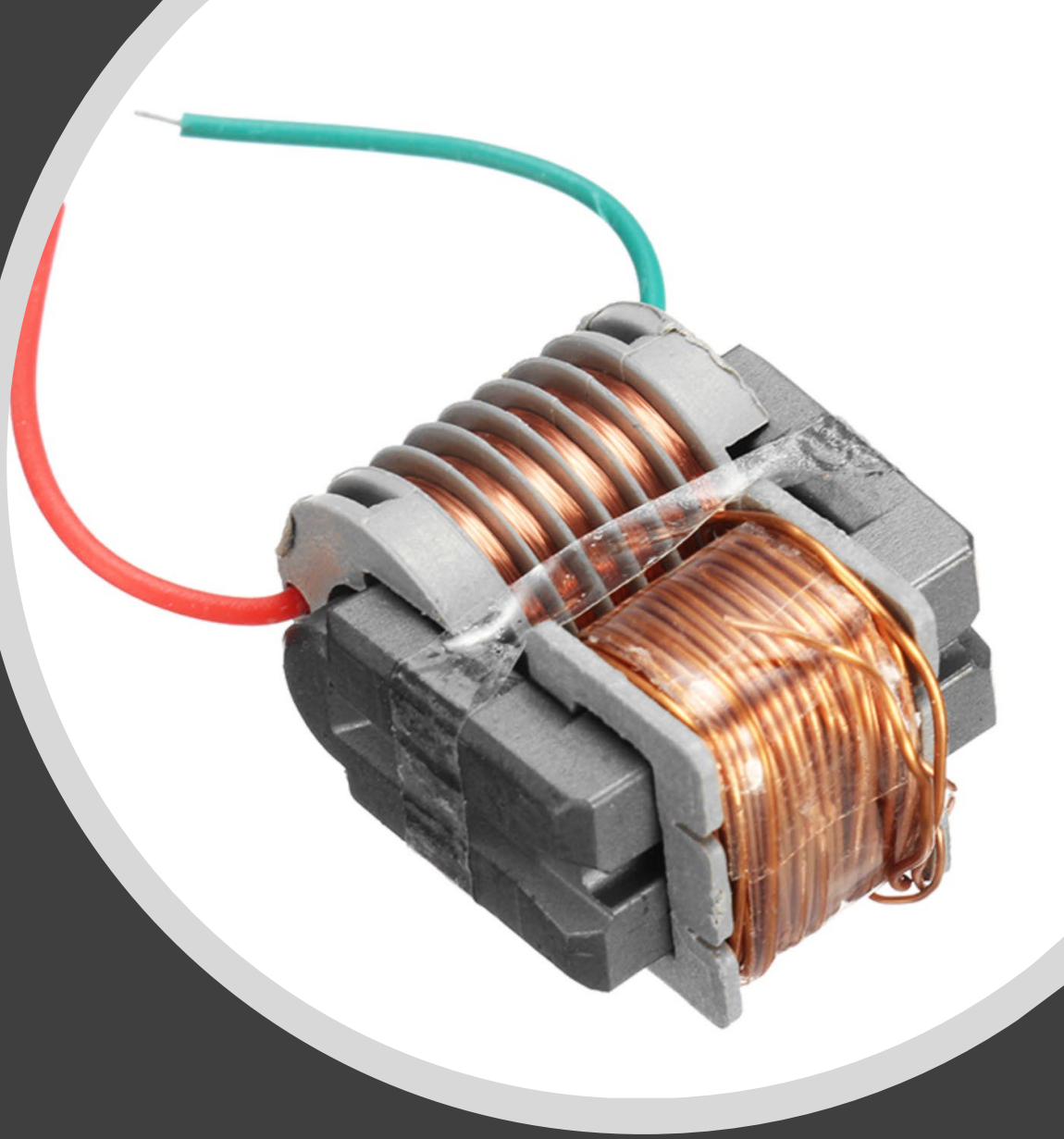

Multiplier Circuit

- The Voltage Multiplier is a special type of diode rectifier circuit which can potentially produce an output voltage many times greater than the applied input voltage.
- During the negative half cycle of the sinusoidal input waveform, diode D1 is forward biased and conducts charging up the pump capacitor C1 to the peak value of the input voltage (Vp). Because there is no return path for capacitor C1 to discharge into, it remains fully charged & acts as a storage device in series with the voltage supply. At the same time, diode D2 conducts via D1 charging up capacitor C2.
- During the positive half cycle, diode D1 is reverse biased, blocking the discharging of C1. Meanwhile diode D2 is forward biased charging up capacitor C2. But because there is a voltage across capacitor C1 already equal to the peak input voltage, capacitor C2 charges to twice the peak voltage value of the input signal.

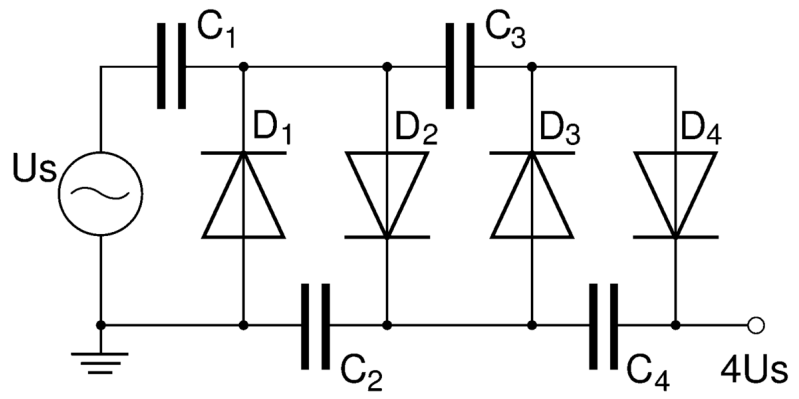

Multiplier Circuit

- Allows higher voltages to be created from a low voltage power source without a need for an expensive high voltage transformer.
- The voltage doubler circuit makes it possible to use a transformer with a lower step up ratio than would be needed if an ordinary full wave supply were used.
- Components needs to be lightweight.
- In this project we're using the Multilayer Ceramic Capacitors MLCC - SMD/SMT 3kV 1000pF X7R 10% Flex Term AEC-Q200, 0.2A HIGH VOLTAGE SILICON RECTIFIER diode.
- Custom components were created on Multisim in order to get an accurate representation of how our final product would perform.

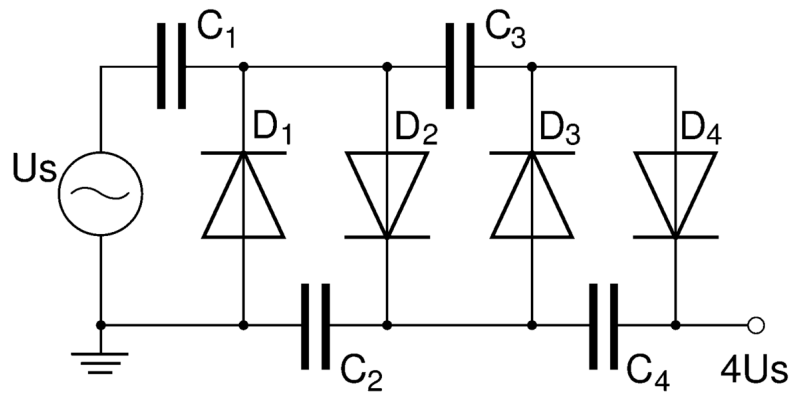

Voltage Multiplier Simulation

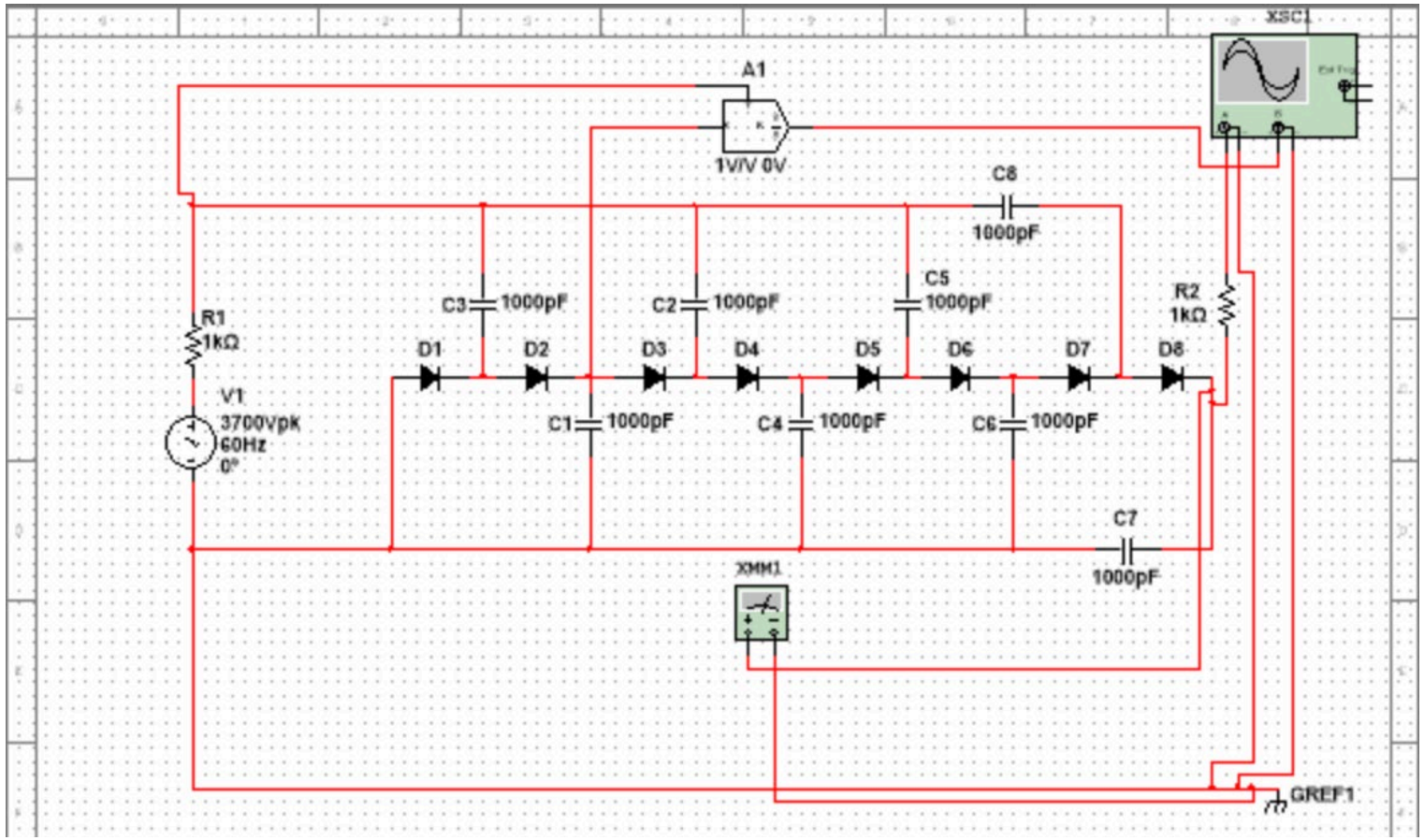

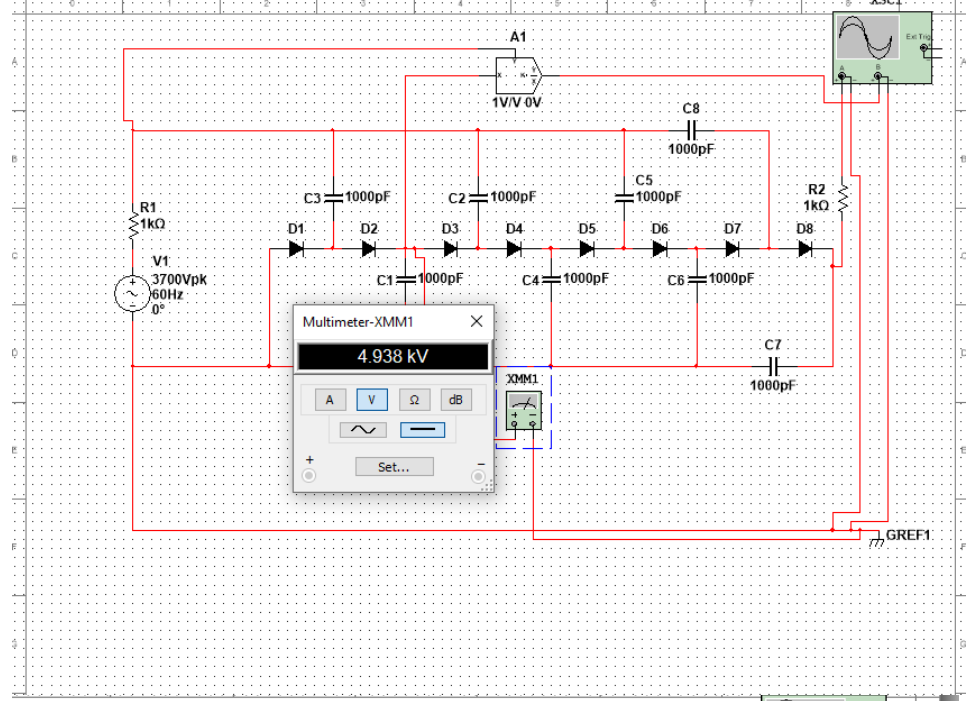

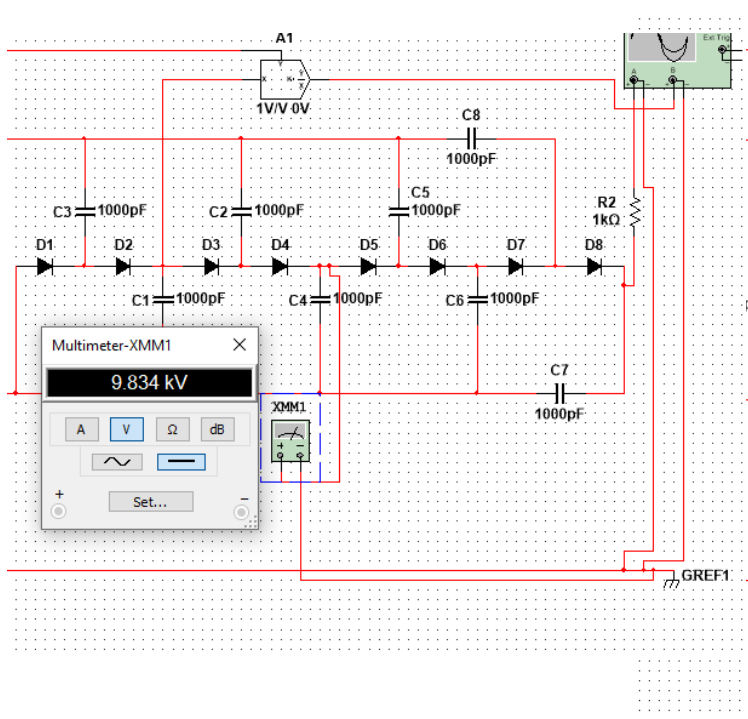

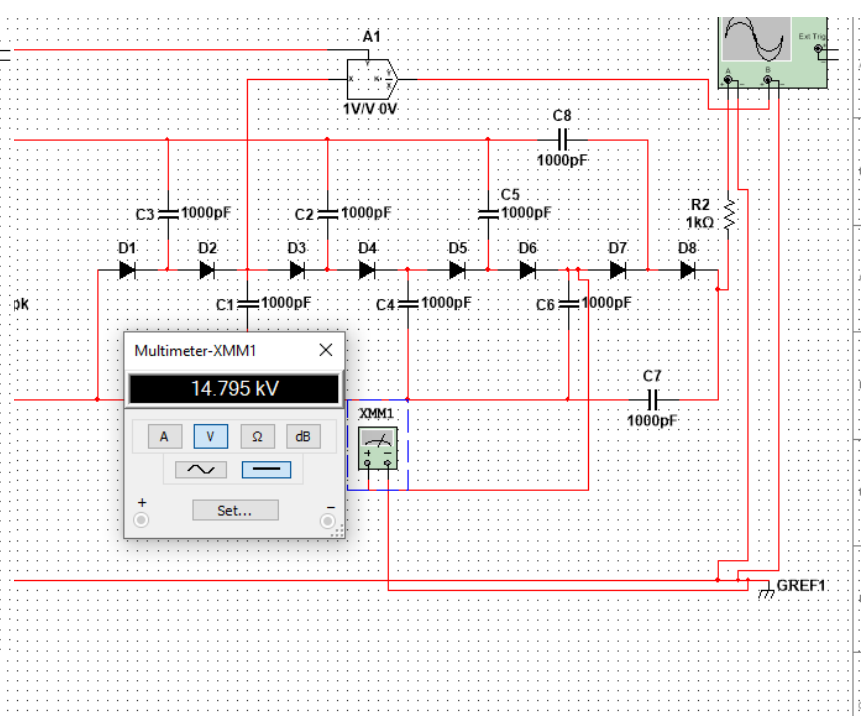

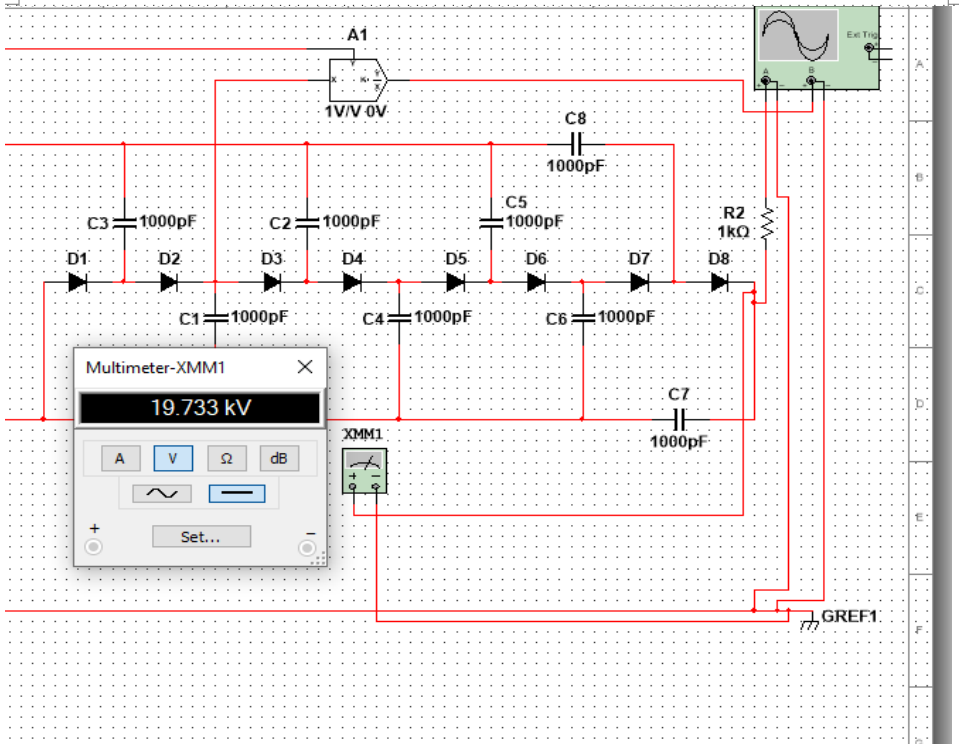

Voltage Multiplier Simulations

- Shown are the voltage readings after 1, 2, 3, and 4 stages.
- We would therefore add more stages to the multiplier to step up the final output voltage to reach our needed range

Royer Circuit Oscillator

- To be able to convert from DC to AC voltage, a voltage oscillator is required.
- In this case we chose to use a “Royer Circuit” for our oscillator.
- This type of circuit is low cost and smaller in size compared to other oscillator circuits.
- The Royer Oscillator generates stable oscillations.
- As one of the transistors enters a saturation region, the other transistor will be in cut off state for some portion of the input voltage. Then later, the roles will reverse. This continues to give the output.
- Whichever output comes from the transistors will be the output through the secondary windings of the transformer

Royer Circuit

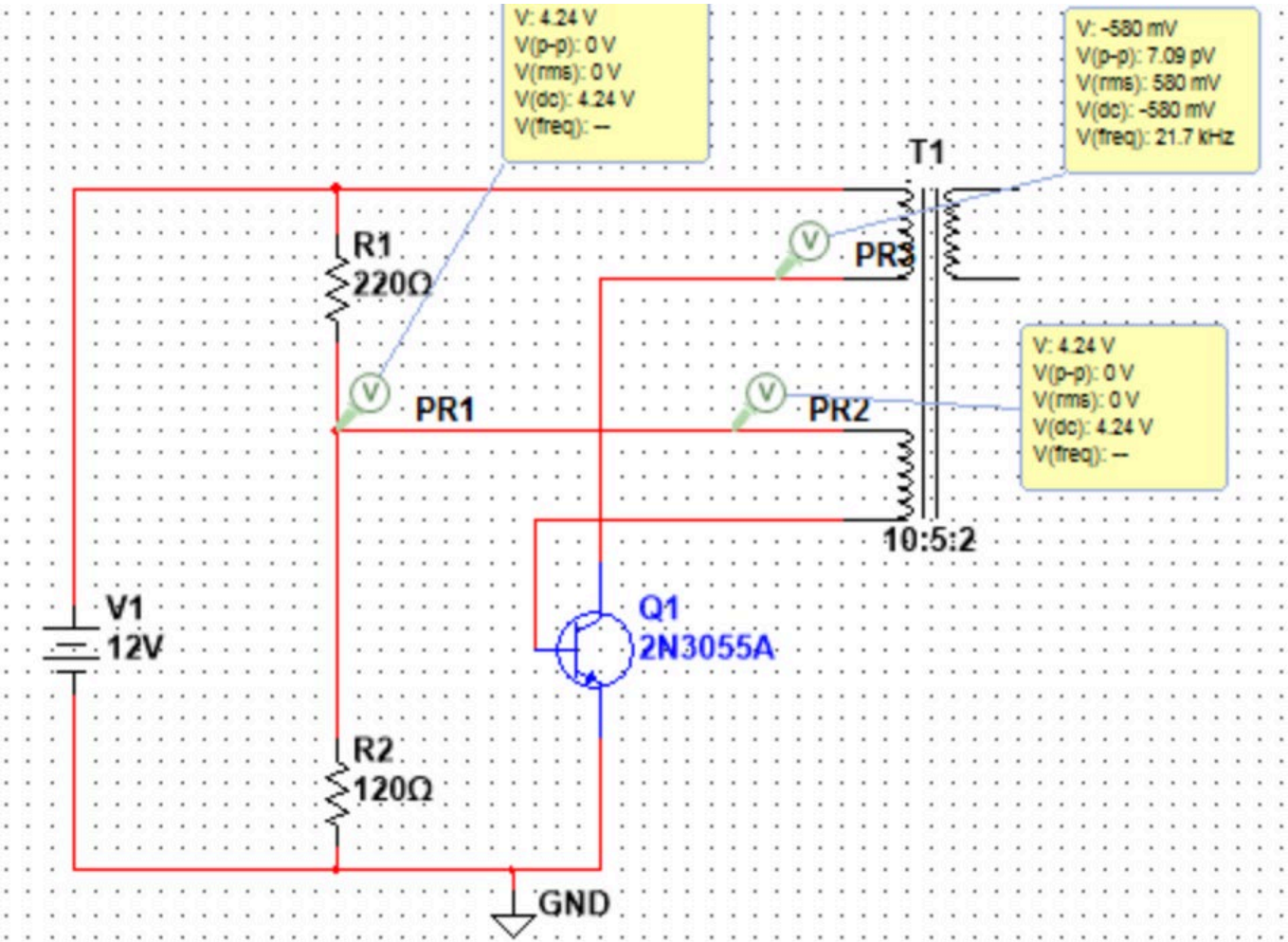

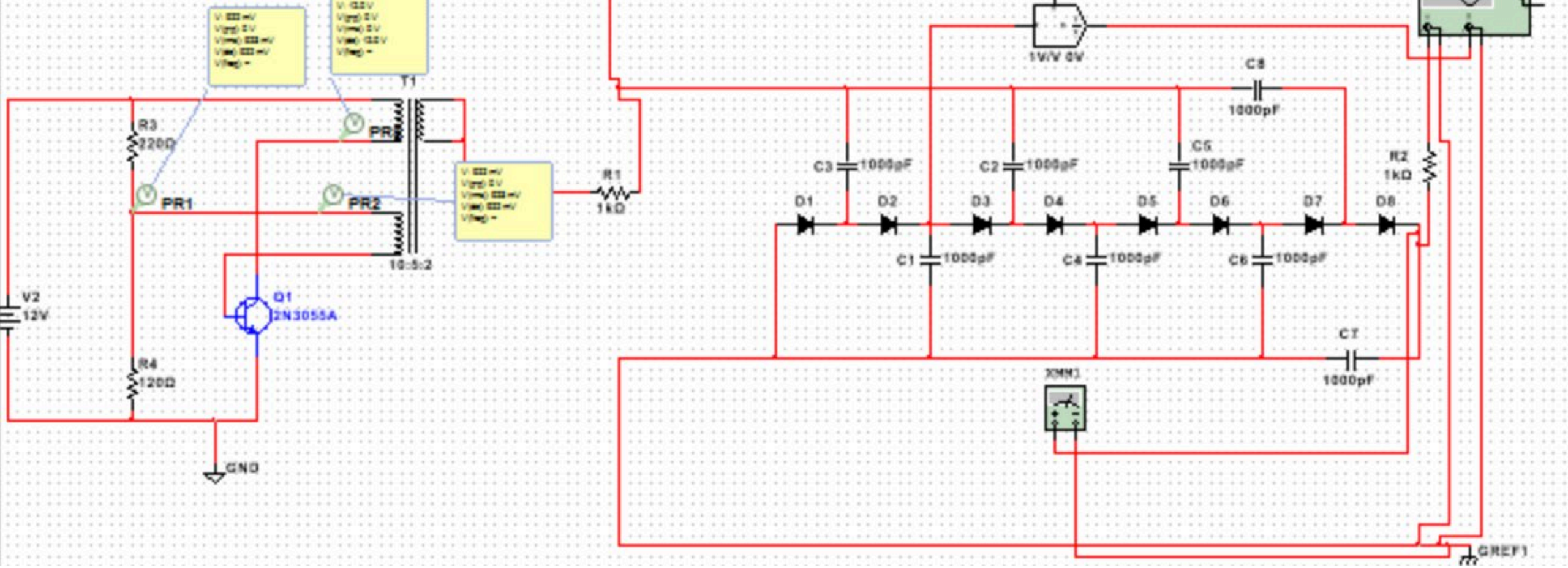

Combined Circuit

Currently being worked on to provide accurate results

References

- Ieta, A. An electrohydrodynamic rotational device. *US Provisional Patent Application* 62/674,022.
- Krauss, Ethan Daniel. *Self Contained Ion Powered Aircraft.* 6 Nov. 2018.
- Kuphaldt, Tony R. “Voltage Multipliers (Doublers, Triplers, Quadruplers, and More): Diodes and Rectifiers: Electronics Textbook.” *All About Circuits*, EETech Media, LLC., 29 Mar. 2009, www.allaboutcircuits.com/textbook/semiconductors/chpt-3/voltage-multipliers/.
- “Royer Oscillator : Circuit Diagram and Its Applications.” *ElProCus*, 4 Feb. 2020, www.elprocus.com/royer-oscillator-working-and-its-applications/.
- S. Park, J. Yang and J. Rivas-Davila, “A Hybrid Cockcroft-Walton/Dickson Multiplier for High Voltage Generation,” in *IEEE Transactions on Power Electronics*, vol 35, no. 3, pp. 2714-2723, March 2020.
- Wilson, B., F. R. S. Farther experiments in electricity. *Phil. Trans. Roy. Soc. London* 51, 896-906 (1760).
- Xu, H., He, Y., Strobel, K.L. *et al.* Flight of an aeroplane with solid-state propulsion. *Nature* **563,** 532–535 (2018) doi:10.1038/s41586-018-0707-9
- Yiou He, Dept. of Electrical Engineering and Computer Science, Massachusetts Institute of Technology, Cambridge, MA, USA